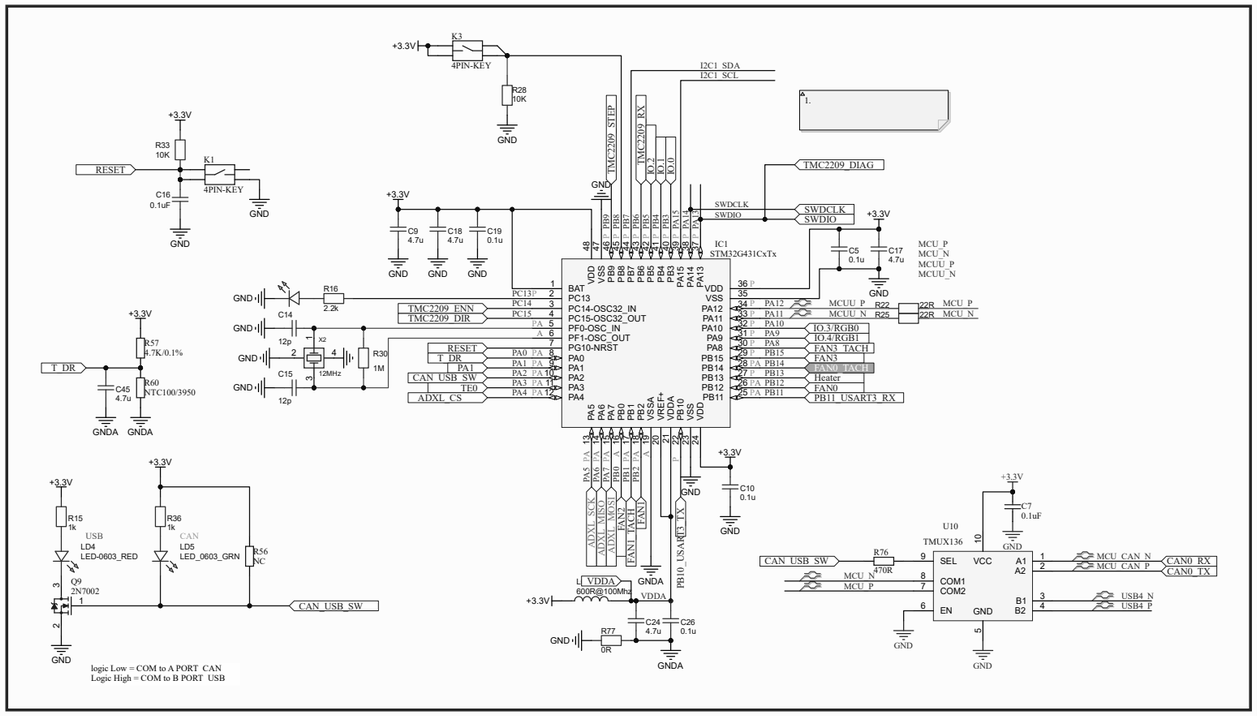

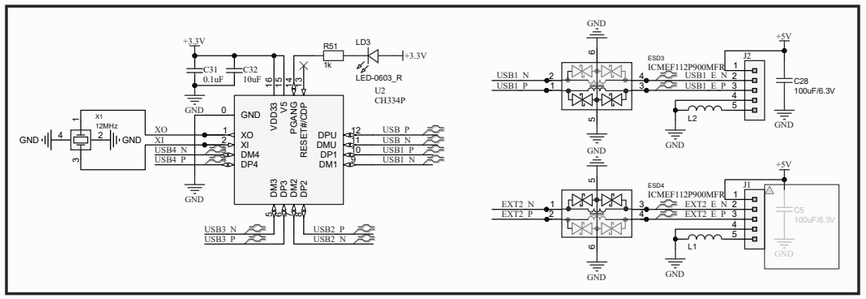

V1.1
1.add Driver NTC
2.add 3.3V/5v monitor
3.add 24v monitor

V1.2
1.change to XT30
2.add reserve protection
3.fix can/usb indicate

V1.3
1.Add level_shift to FAN_TACH
2.Fix silk mark
3.Add jumper resistor from USB-C to STM32
4.ADXL345-EP optional
5.Change the LDO chip to TLV75733

V2.0
1.Change MCU to G431CxT3
2.Remap pin

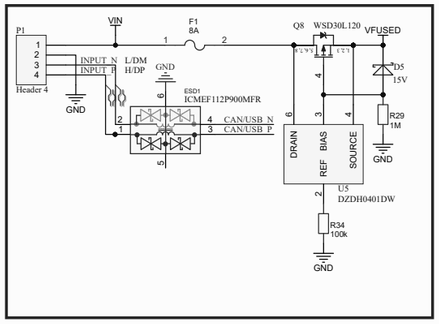

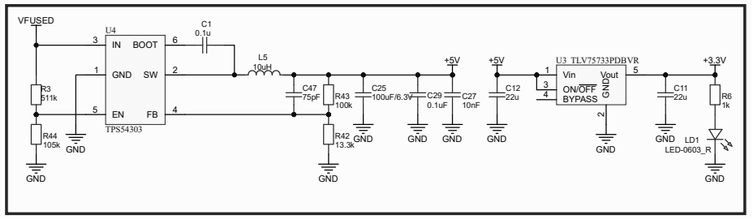

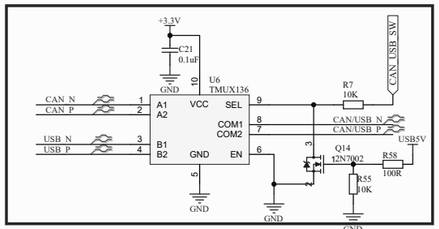

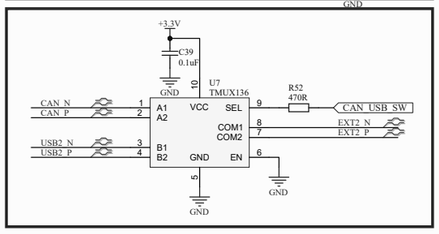

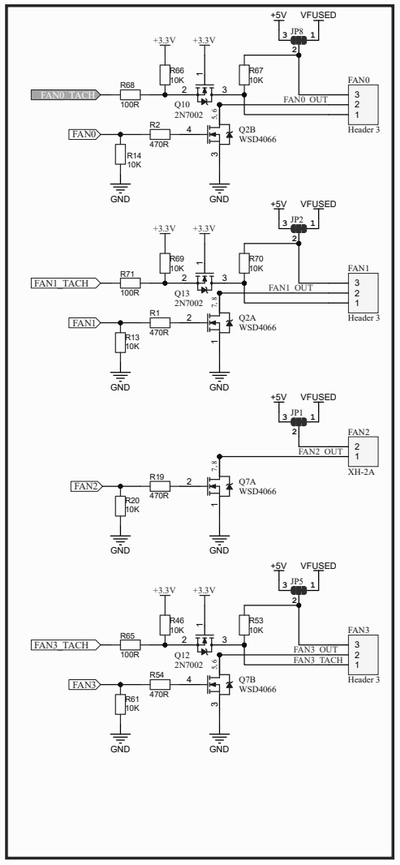

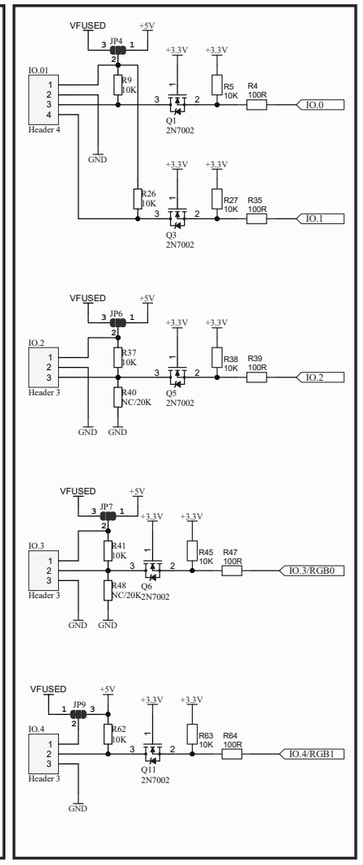

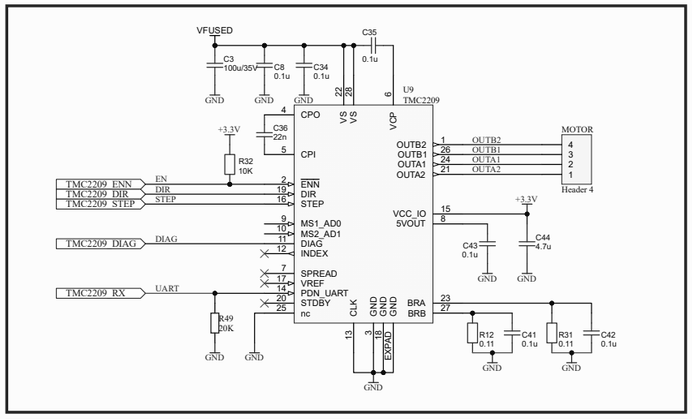

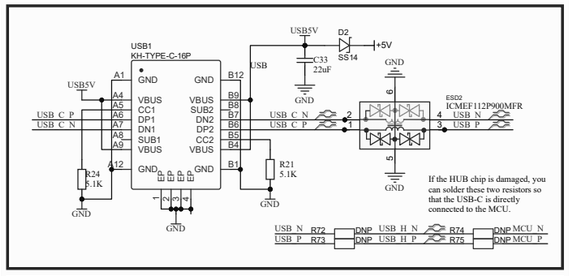

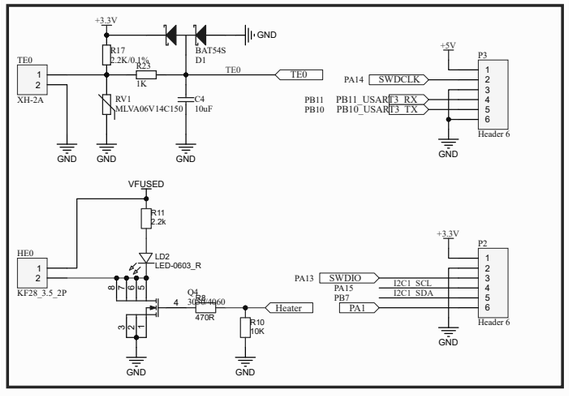

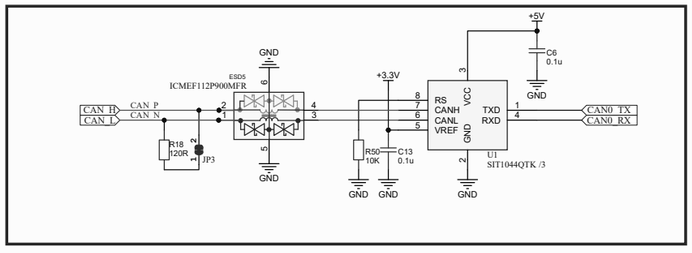

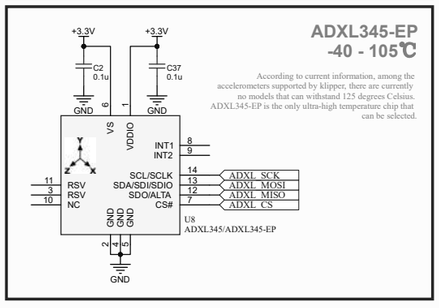

ADXL345-EP
-40 - 105℃

According to current information, among the accelerometers supported by klipper, there are currently no models that can withstand 125 degrees Celsius. ADXL345-EP is the only ultra-high temperature chip that can be selected.